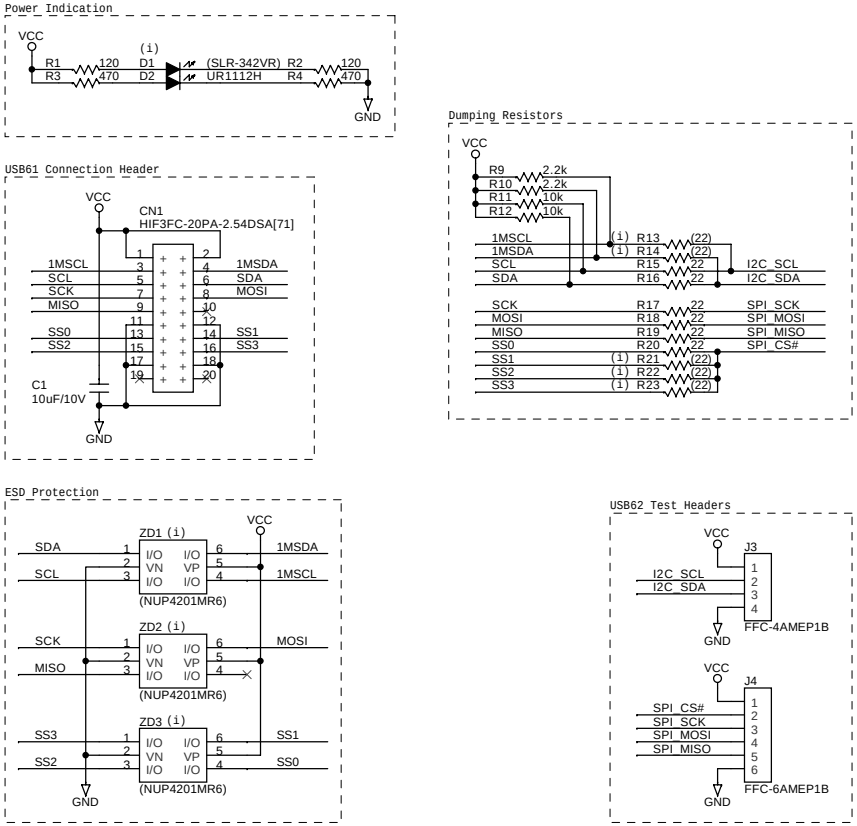

(i) Do not mount.

Document Number	**R129:e2e-SEEPROM** RATOC Systems, Inc.
Title	I2C/SPI SEEPROM Adapter
Size A3	DESIGNED BY
Rev 1.01	
Date: Tuesday, August 07, 2012	Sheet 1 of 1